Repair/Parts

Merkur™ Bellows Displacement Pump

312793H
EN

For pumping isocyanates, UV coatings, and other moisture-sensitive materials. For professional use only.

See page 6 for model information, including maximum working pressures.

Important Safety Instructions
Read all warnings and instructions in this manual. For complete warnings and instructions see your pump or package manual. Hazard symbols refer to specific procedure risks. Save these instructions.

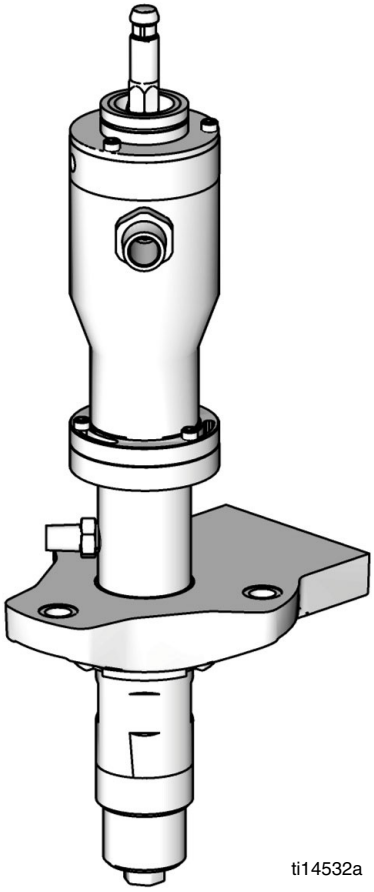

PROVEN QUALITY. LEADING TECHNOLOGY.

Contents

Related Manuals 2
Warnings 3
Important Two-Component Material Information . 5
Isocyanate Conditions 5
Material Self-ignition 5
Keep Components A and B Separate 5
Moisture Sensitivity of Isocyanates 5
Changing Materials 5
Models 6
Component Identification 7
Repair 8
General Information 8
Preparation 8
Replace the Bellows 9
Complete Pump Repair 11
Parts 16
Repair Kits 20
Optional Kits 21
Accessories 21
Dimensions 22
Technical Data 23
Graco Standard Warranty 24
Graco Information 24

Related Manuals

Manual	Description
312795	Merkur Bellows Pump Assembly
312796	NXT™ Air Motor
312799	Merkur Bellows Spray Packages, AA and Airless
312798	Merkur Electrostatic Spray Packages

Warnings

The following warnings are for the setup, use, grounding, maintenance, and repair of this equipment. The exclamation point symbol alerts you to a general warning and the hazard symbols refer to procedure-specific risks. When these symbols appear in the body of this manual, refer back to these Warnings. Product-specific hazard symbols and warnings not covered in this section may appear throughout the body of this manual where applicable.

⚠ WARNING

FIRE AND EXPLOSION HAZARD

Flammable fumes, such as solvent and paint fumes, in **work area** can ignite or explode. To help prevent fire and explosion:

- Use equipment only in well ventilated area.
- Eliminate all ignition sources; such as pilot lights, cigarettes, portable electric lamps, and plastic drop cloths (potential static arc).
- Keep work area free of debris, including solvent, rags and gasoline.
- Do not plug or unplug power cords, or turn power or light switches on or off when flammable fumes are present.
- Ground all equipment in the work area. See **Grounding** instructions.
- Use only grounded hoses.
- Hold gun firmly to side of grounded pail when triggering into pail.
- If there is static sparking or you feel a shock, **stop operation immediately.** Do not use equipment until you identify and correct the problem.
- Keep a working fire extinguisher in the work area.

SKIN INJECTION HAZARD

High-pressure fluid from gun, hose leaks, or ruptured components will pierce skin. This may look like just a cut, but it is a serious injury that can result in amputation. **Get immediate surgical treatment.**

- Do not spray without tip guard and trigger guard installed.
- Engage trigger lock when not spraying.
- Do not point gun at anyone or at any part of the body.
- Do not put your hand over the spray tip.
- Do not stop or deflect leaks with your hand, body, glove, or rag.
- Follow the **Pressure Relief Procedure** when you stop spraying and before cleaning, checking, or servicing equipment.
- Tighten all fluid connections before operating the equipment.
- Check hoses and couplings daily. Replace worn or damaged parts immediately.

⚠WARNING

EQUIPMENT MISUSE HAZARD

Misuse can cause death or serious injury.

- Do not operate the unit when fatigued or under the influence of drugs or alcohol.
- Do not exceed the maximum working pressure or temperature rating of the lowest rated system component. See **Technical Data** in all equipment manuals.
- Use fluids and solvents that are compatible with equipment wetted parts. See **Technical Data** in all equipment manuals. Read fluid and solvent manufacturer's warnings. For complete information about your material, request MSDS from distributor or retailer.
- Do not leave the work area while equipment is energized or under pressure. Turn off all equipment and follow the **Pressure Relief Procedure** when equipment is not in use.
- Check equipment daily. Repair or replace worn or damaged parts immediately with genuine manufacturer's replacement parts only.
- Do not alter or modify equipment.
- Use equipment only for its intended purpose. Call your distributor for information.
- Route hoses and cables away from traffic areas, sharp edges, moving parts, and hot surfaces.
- Do not kink or over bend hoses or use hoses to pull equipment.
- Keep children and animals away from work area.
- Comply with all applicable safety regulations.

MOVING PARTS HAZARD

Moving parts can pinch, cut or amputate fingers and other body parts.

- Keep clear of moving parts.
- Do not operate equipment with protective guards or covers removed.
- Pressurized equipment can start without warning. Before checking, moving, or servicing equipment, follow the **Pressure Relief Procedure** and disconnect all power sources.

SUCTION HAZARD

Powerful suction could cause serious injury.

- Never place hands near the pump fluid inlet when pump is operating or pressurized.

TOXIC FLUID OR FUMES HAZARD

Toxic fluids or fumes can cause serious injury or death if splashed in the eyes or on skin, inhaled, or swallowed.

- Read MSDSs to know the specific hazards of the fluids you are using.
- Store hazardous fluid in approved containers, and dispose of it according to applicable guidelines.
- Always wear chemically impermeable gloves when spraying, dispensing, or cleaning equipment.

PERSONAL PROTECTIVE EQUIPMENT

You must wear appropriate protective equipment when operating, servicing, or when in the operating area of the equipment to help protect you from serious injury, including eye injury, hearing loss, inhalation of toxic fumes, and burns. This equipment includes but is not limited to:

- Protective eyewear, and hearing protection.
- Respirators, protective clothing, and gloves as recommended by the fluid and solvent manufacturer.

Important Two-Component Material Information

Isocyanate Conditions

Spraying or dispensing materials containing isocyanates creates potentially harmful mists, vapors, and atomized particulates.

Read material manufacturer's warnings and material MSDS to know specific hazards and precautions related to isocyanates.

Prevent inhalation of isocyanate mists, vapors, and atomized particulates by providing sufficient ventilation in the work area. If sufficient ventilation is not available, a supplied-air respirator is required for everyone in the work area.

To prevent contact with isocyanates, appropriate personal protective equipment, including chemically impermeable gloves, boots, aprons, and goggles, is also required for everyone in the work area.

Material Self-ignition

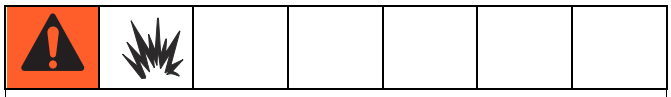

Some materials may become self-igniting if applied too thickly. Read material manufacturer's warnings and material MSDS.

Keep Components A and B Separate

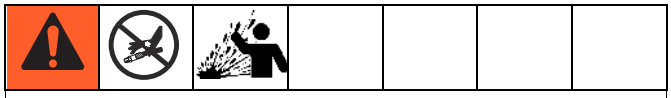

Cross-contamination can result in cured material in fluid lines which could cause serious injury or damage equipment. To prevent cross-contamination of the equipment's wetted parts, **never** interchange component A (isocyanate) and component B (resin) parts.

Moisture Sensitivity of Isocyanates

Isocyanates (ISO) are catalysts used in two component coatings. ISO will react with moisture (such as humidity) to form small, hard, abrasive crystals, which become suspended in the fluid. Eventually a film will form on the surface and the ISO will begin to gel, increasing in viscosity. If used, this partially cured ISO will reduce performance and the life of all wetted parts.

NOTE: The amount of film formation and rate of crystallization varies depending on the blend of ISO, the humidity, and the temperature.

To prevent exposing ISO to moisture:

- Always use a sealed container with a desiccant dryer in the vent, or a nitrogen atmosphere. **Never** store ISO in an open container.
- Use moisture-proof hoses specifically designed for ISO, such as those supplied with your system.
- Never use reclaimed solvents, which may contain moisture. Always keep solvent containers closed when not in use.
- Never use solvent on one side if it has been contaminated from the other side.
- Always lubricate threaded parts with ISO pump oil or grease when reassembling.

Changing Materials

- When changing materials, flush the equipment multiple times to ensure it is thoroughly clean.
- Always clean the fluid inlet strainers after flushing.
- Check with your material manufacturer for chemical compatibility.

Most materials use ISO on the A side, but some use ISO on the B side.

Models

Check your displacement pump's identification marking (ID) for the 6-digit part number. Use the following matrix to define the construction of your displacement pump, based on the six digits. For example, displacement pump Part No. LB100A represents a 303 stainless steel bellows style displacement pump, 100 cc, with 3 UHMWPE and 2 PTFE v-packings**.**

To order replacement parts, see **Parts** section starting on page 16. The digits in the matrix do not correspond to the reference numbers in the Parts drawings and lists.

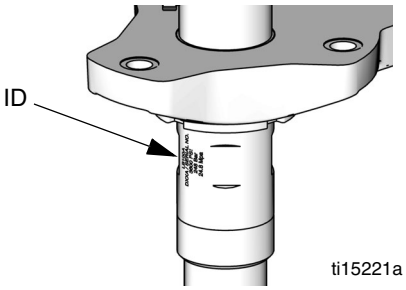

L	B		100	A	
First Digit	**Second Digit (Material)**		**Third, Fourth, and Fifth Digits (Displacement Pump Volume Per Cycle in cc)**	**Sixth Digit (Packings/Seals)**	
L (Lower)	**B**	Bellows Style	**050**	**A**	V-Packings (3 UHMWPE, 2 PTFE)
			100	**B**	U-Cup Seal
			150		

Part Number	Series	Maximum Working Pressure psi (MPa, bar)	Fluid Inlet	Fluid Outlet
LB050A **LB050B**	A	4500 (33.1, 310	3/4 in. npt	3/8 in. npt
LB100A **LB100B**	A	3600 (24.8, 248)	3/4 in. npt	3/8 in. npt
LB150A **LB150B**	A	2400 (16.5, 165)	1 in. npt	3/4 in. npt

Component Identification

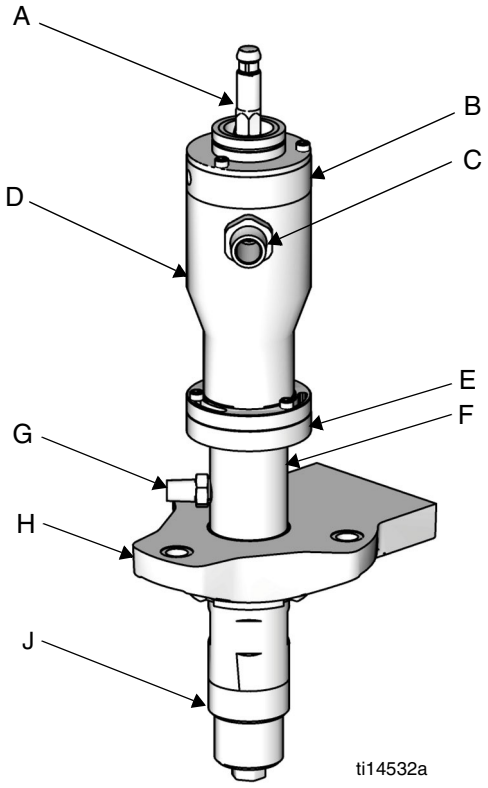

FIG. 1. Component Identification

Key:
A Connecting Rod
B Top Cap
C Pump Fluid Inlet
D Bellows Chamber
E Packing Nut
F Cylinder
G Pump Fluid Outlet
H Pump Adapter
J Foot Cap

Repair

General Information

NOTE: Reference numbers and letters in parentheses in the text refer to the callouts in the figures.

Always use Genuine Graco Parts and Accessories, available from your Graco distributor. If you supply your own accessories, be sure they are adequately sized and pressure rated for your system.

Preparation

Follow all warnings and instructions in your pump manual for the following preliminary steps:

1. Flush the equipment.
2. Stop the pump close to the middle of the stroke.
3. Relieve the pressure.
4. Disconnect the air and fluid hoses and the ground wire.
5. Remove the shield.

NOTE: If the overflow chamber (optional accessory) contains fluid, unscrew the bottle (103) and discard. See FIG. 4. If it has not been used, the bottle can remain attached to the cap.

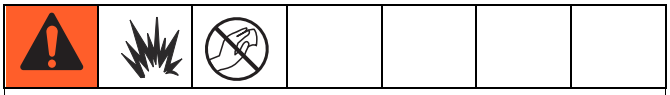

To avoid the buildup of electrostatic charge, do not rub the plastic bottle with a dry cloth while it is attached to the pump. Remove the bottle to clean, if needed.

6. Use a 5 mm hex wrench to loosen the screws (10) on the top cap.
7. Hold the coupling nut with a wrench. Use another wrench to turn the motor shaft. To avoid damage to the top cap and the D-shaped seal, **do not turn the coupling nut.**
8. Lower the coupling nut and remove the coupling collars.

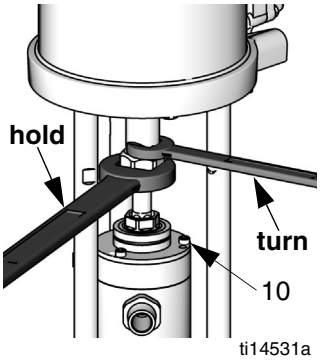

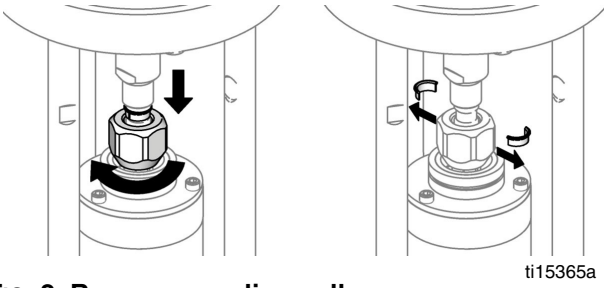

FIG. 2. Remove coupling collars.

9. Push up the motor shaft. Remove the coupling nut.
10. **Cart Mount:** Tilt the cart onto its back to service the displacement pump.

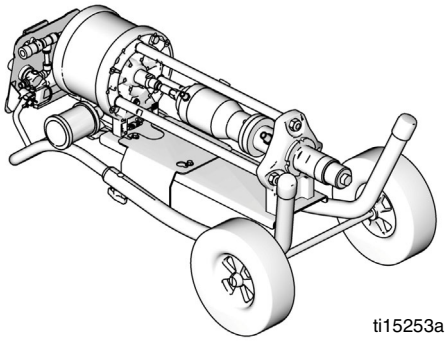

FIG. 3. Tilt pump for repair.

Replace the Bellows

Disassemble Bellows and Chamber

NOTICE
To avoid damage to the top cap and D-shaped seal, never apply torque to the connecting rod.

1. Follow all steps under **Preparation**, page 8.
2. Use a 5 mm hex wrench to remove the three screws (10), then remove the shield mount spacer (9) and the top cap (8). Remove and discard the bellows chamber o-ring (12).
3. Leave the overflow chamber attached to the top cap unless it needs to be replaced.
4. **If replacing overflow chamber:** Unscrew the bottle (103) if not already removed, then remove the lid (101) from the fitting (104). Discard the cup and lid. Use a socket to remove the retaining nut (105) in the top cap (8). Remove and discard the D-shaped seal (106). Leave the fitting (104) attached to the top cap (8) unless it needs to be replaced.

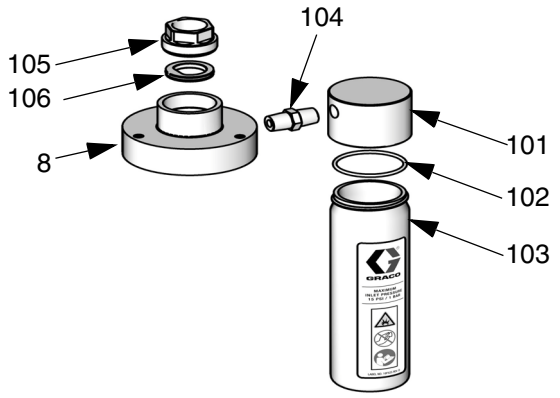

FIG. 4. Overflow chamber

5. Use a socket to remove the foot cap (42). Remove and discard the o-ring (41).
6. Hold the hex on the connecting rod (14) with a 19 mm (3/4 in.) wrench. Brace against tie rod or bench so it cannot turn. Use a socket to loosen the piston/rod assembly.

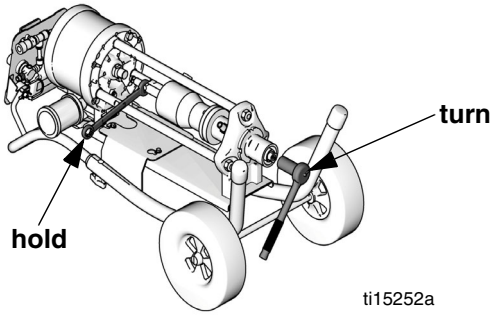

FIG. 5. Hold connecting rod steady.

7. See FIG. 6. Pull the connecting rod (14) and bellows (7) out of the top of the bellows chamber (1). Leave the bellows chamber (1) attached to the packing nut.
8. Remove the bellows bushing (6) and the damaged bellows (7).
9. Remove the snap bushing (3). Remove and discard the o-rings (4, 5).

Reassemble Bellows and Chamber

1. Slide the bellows bushing (6) and new bellows (7) on the connecting rod (14).
2. Install new o-rings (4 and 5) into snap bushing. Grease and install snap bushing (3) on end of bellows and snap into place.
3. Put the bellows o-ring (12) loosely around the bellows (7). Push the connecting rod (14), with fully assembled bellows (7) into the bellows chamber (1). Hand tighten the connecting rod.
4. Hold the hex on the connecting rod (14) and use a torque wrench to turn the piston (45). Torque to 74-86 ft-lb (100-117 N•m).
5. Make sure the o-ring (12) is against the top of the bellows. Push the connecting rod (14) and bellows (7) snugly into the bellows chamber (1).
6. Set top cap (8) on the connecting rod (14). Do not tighten.
7. **If Replacing Overflow Chamber:** Order Kit 24E298. (See page 21.) Install the new D-shaped seal (106) on the connecting rod (14). Hold connecting rod with 19 mm (3/4 in.) wrench. Install and tighten the retaining nut (105). Torque to 100-120 in-lb (11-14 N•m). **Do not overtighten.**
8. Install a new foot cap o-ring (41). Grease and install the foot cap (42). Torque to 54-66 ft-lb (73-89 N•m).
9. Push up on the motor shaft. Slide on the coupling nut (55). Install the coupling collars (56).
10. Hold connecting rod with 19 mm (3/4 in.) wrench. Install and tighten the coupling nut. Torque to 75-80 ft-lb (138-146 N•m).
11. **If Replacing Overflow Chamber:** Insert the o-ring (102) into the lid (101). Tighten the new bottle (103) with lid (101) attached, to the fitting (104).
12. Turn connecting rod (14) to align holes in top cap (8) with holes on bellows chamber (1) so the D-flat in the top cap faces the front of the pump. Reattach the top cap (8) and shield mount spacer (9). Torque screws (10) to 100-120 in-lb (11-14 N•m).

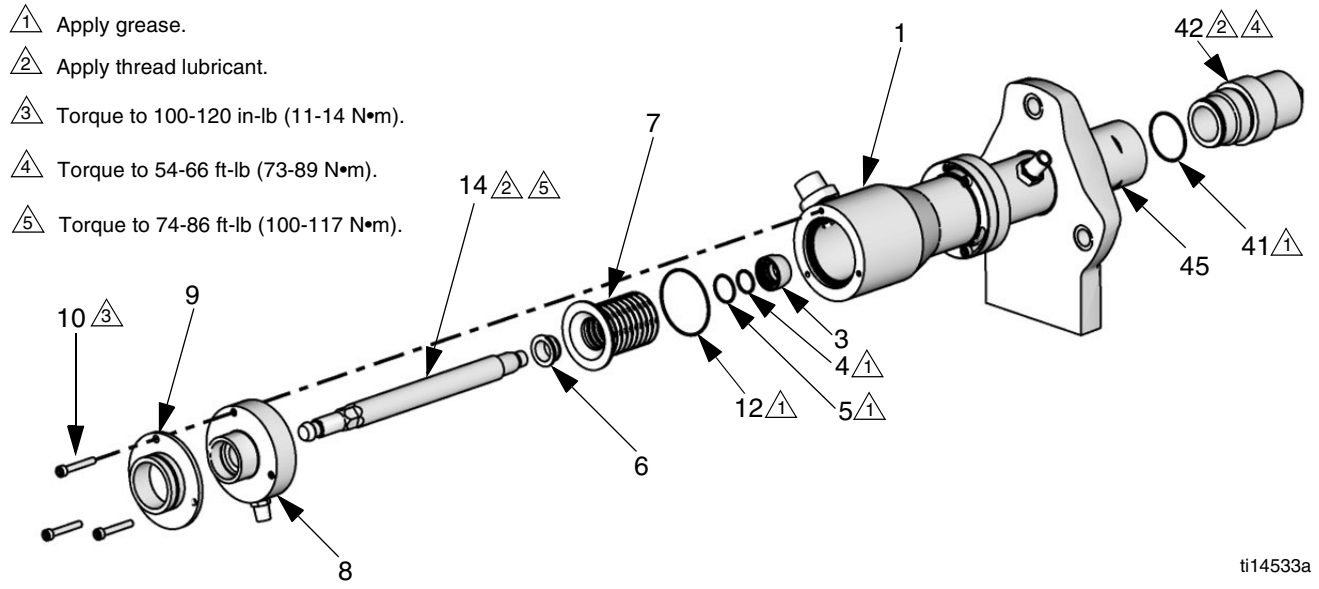

FIG. 6. Replace bellows.

Complete Pump Repair

Disassembly

1. Follow all steps under **Preparation**, page 8.
2. Use a socket to remove the foot cap (42). Remove and discard the o-ring (41).
3. Use a 5 mm hex wrench to loosen the three screws (10) on the top cap. Lift the air motor shaft to remove the top cap (8) and the shield mount spacer (9) from the bellows chamber.
4. Hold the hex on the connecting rod (14) with a 19 mm (3/4 in.) wrench so it cannot turn. Use a socket to loosen the piston/rod assembly. See FIG. 5.
5. Pull the piston/rod assembly out of the bottom of the cylinder (27).
6. **V-Packing Models:** Remove the piston packings (37, 39), glands (38, 40), and spring (35). See FIG. 14, page 14.
7. **U-Cup Models:** Remove the bearing (52), u-cup (53), and washer (54). See FIG. 13, page 13.
8. **Models with overflow chamber:** If overflow chamber needs to be replaced, see **Replace the Bellows**, page 9. If overflow chamber is fine, leave it attached to the top cap.
9. Remove the connecting rod (14) and bellows (7).
10. Use a 5 mm allen wrench to remove the three screws (17) and washers (18), then remove the bellows chamber (1). Remove and discard the bellows chamber o-ring (12).
11. Use a 54 mm (2 1/8 in.) socket wrench to remove the packing nut (20).
12. **V-Packing Models:** Remove the glands (23, 26), throat packings (24, 25), and spring (22). See FIG. 10, page 12.
13. **U-Cup Models:** Use an o-ring pick or pliers to remove the spring clip (51), the u-cup (50), and the bearing (49). FIG. 11, page 13.
14. Remove and discard the packing nut top o-ring (2) and bottom o-ring (21).
15. Put the hex of the piston rod (31) in a vise. Use a 1/2 in. hex wrench to remove the flow-through nut (44) from the bottom of the piston (45).
16. Remove the o-ring (32) and seat (46). Remove from vise and tip out the check ball (47).

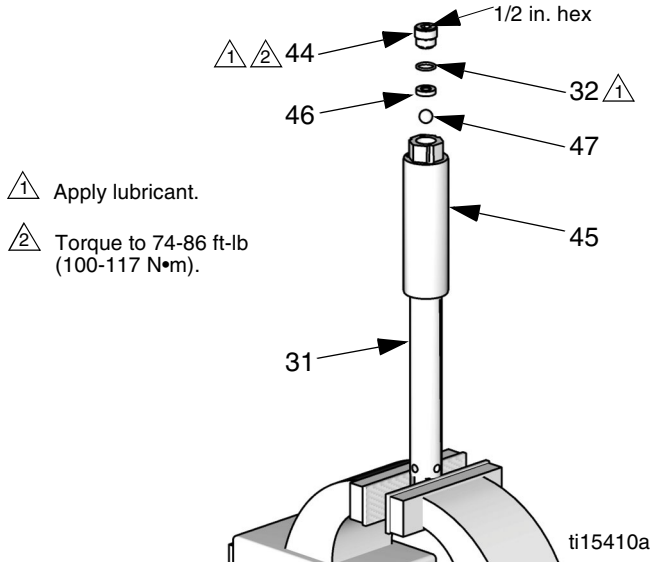

FIG. 7. Outlet check.

17. Put the hex of the piston (45) in a vise, then use a 23 mm socket to remove the piston rod (31).

18. Remove the piston o-ring (32) and seat (33). Remove from vise and tip out the check ball (34) and spring (36).

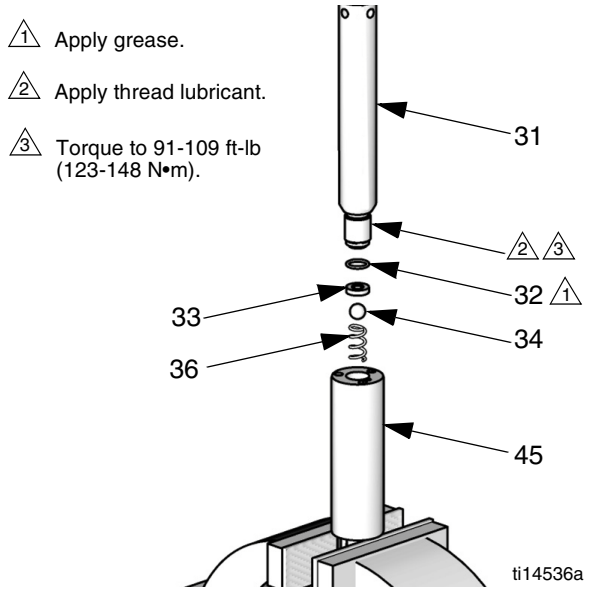

FIG. 8. Piston check.

19. If the bellows is damaged, see **Replace the Bellows**, page 9. If not, leave the bellows attached to the connecting rod.

Reassembly

1. Clamp the hex of the piston (45) in a vise. Install new spring (36) on the ball stop.

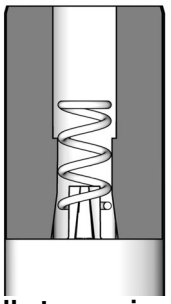

FIG. 9. Ball stop spring

2. Install check ball (34) and seat (33) in the top of the piston. Grease and install new o-ring (32).

3. With hex of piston (45) still in vise, apply thread lubricant and then use a socket to reattach the displacement rod (31). Torque to 91-109 ft-lb (123-148 N•m).

4. Clamp the hex of piston rod in vise. Install new check ball (47) and seat (46) in the bottom of the piston. Grease and install new o-ring (32).

5. Grease and reinstall the flow-through nut (44). Torque to 74-86 ft-lb (100-117 N•m).

6. Place the packing nut (20) upside down on the bench so packings will align properly.

   V-Packing Models: Lubricate and install the female gland (26), new v-packings, 24, 25) and the male gland (23) in the packing nut. **Lips must face up, so they will face toward the cylinder when the packing nut is installed.** Push packings all the way in.

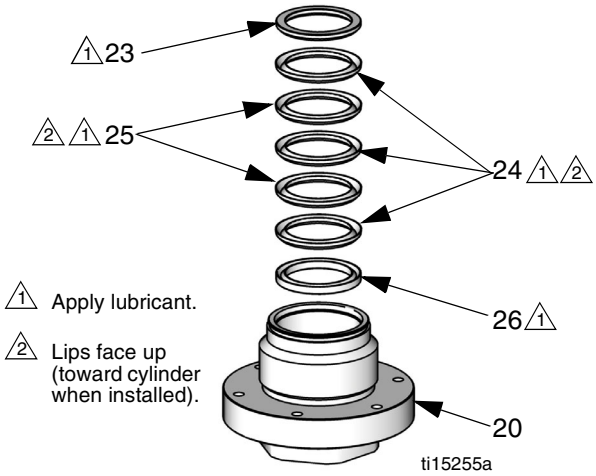

FIG. 10. Throat v-packings

   U-Cup Models: Lubricate and install the bearing (49), the u-cup packing (50), and the spring clip (51). **U-cup must face up, so it will face toward the cylinder when the packing nut is installed.**

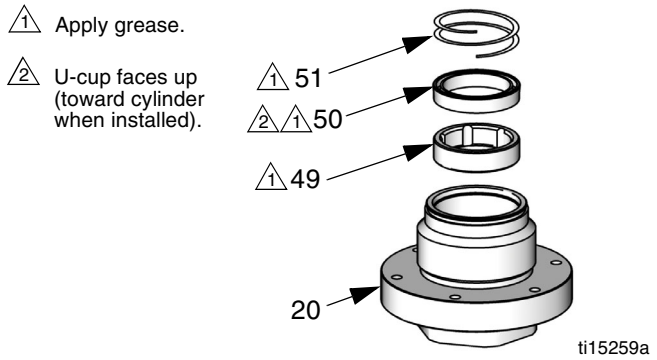

FIG. 11. U-Cup throat seal

7. Install the top o-ring (2) and the bottom o-ring (21) on the packing nut (20).

8. **V-Packing Models:** Install the spring (22) in the top of the cylinder (27).

9. Grease and reattach the packing nut (20). Torque to 54-66 ft-lb (73-89 N•m).

10. Use screws (17) and washers (18) to reattach the bellows chamber (1). Align the screws so the inlet fitting does not interfere with the tie rods. Torque screws (17) to 100-120 in-lb (11-14 N•m).

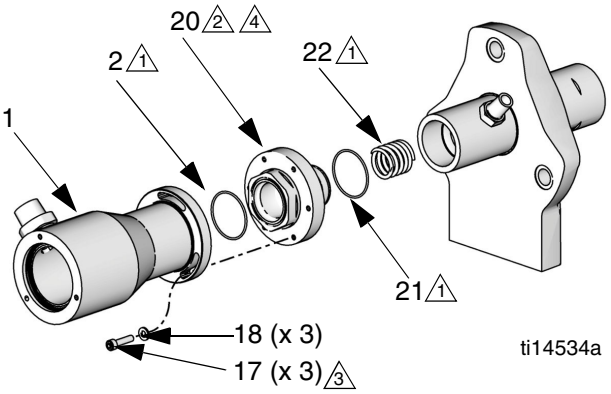

FIG. 12. Bellows chamber and packing nut.

11. **V-Packing Models:** Install new piston spring (35). Lubricate and install male gland (40), new piston packings (37, 39), and female gland (38) on the displacement rod (31). **Lips must face toward the cylinder.**

12. **U-Cup Models:** Lubricate and install the washer (54), u-cup (53), and bearing (52). **U-cup must face toward the cylinder.**

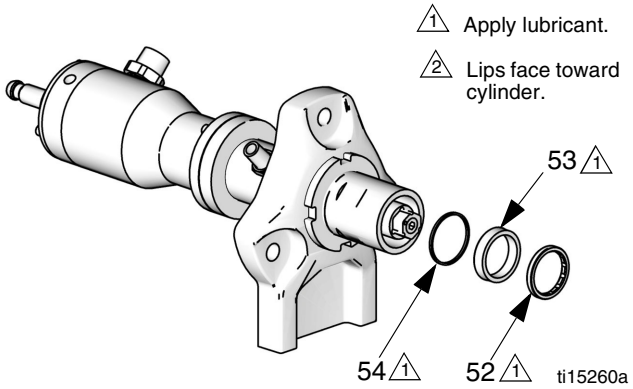

FIG. 13. U-Cup piston seal

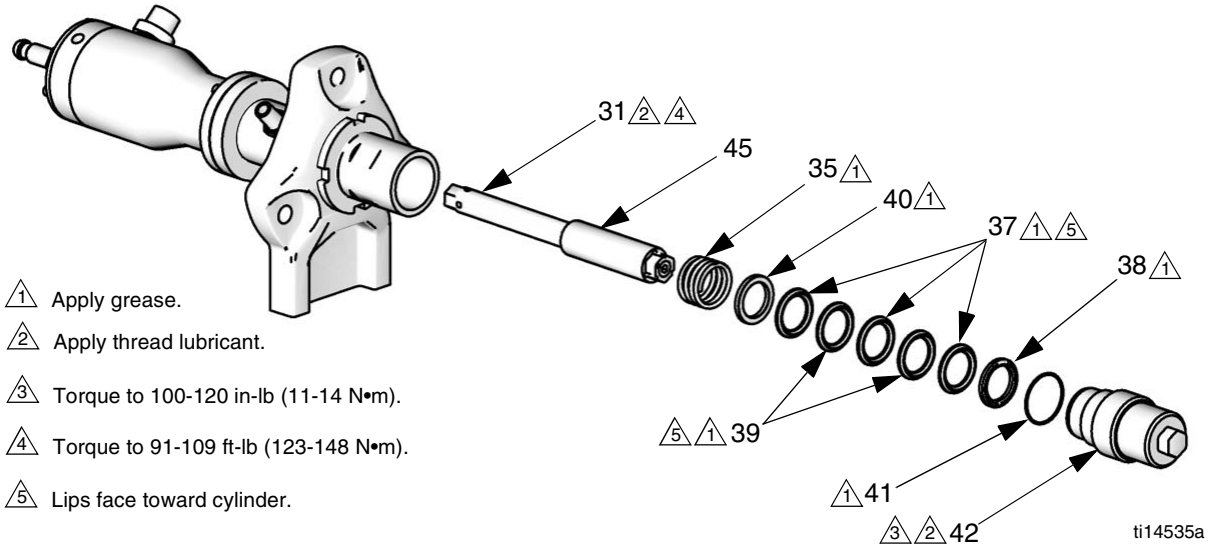

FIG. 14. Piston v-packings

13. Grease the outside of the displacement rod shaft and the piston, near the hexes. Push the rod and the piston into the cylinder (27).

14. **If Replacing Bellows:** Follow steps 1 and 2 under **Reassemble Bellows and Chamber,** page 10, to put new bellows on connecting rod.

15. See FIG. 6, page 10. Put the bellows o-ring (12) loosely around the bellows (7). Push the connecting rod (14), with fully assembled bellows (7) into the bellows chamber (1). Hand tighten the connecting rod.

16. Hold the hex on the connecting rod (14) and use a torque wrench to turn the piston (45). Torque to 74-86 ft-lb (100-117 N•m).

17. Set top cap (8) on the connecting rod (14). Do not tighten.

18. **If Replacing Overflow Chamber:** Order Kit 24E298. (See page 21.) Install the new D-shaped seal (106) on the connecting rod (14). Hold connecting rod with 19 mm (3/4 in.) wrench. Install and tighten the retaining nut (105). Torque to 100-120 in-lb (11-14 N•m). **Do not overtighten.**

19. Install a new foot cap o-ring (41). Grease and install the foot cap (42). Torque to 54-66 ft-lb (73-89 N•m).

20. Push up on the motor shaft. Slide on the coupling nut (55). Install the coupling collars (56).

21. Hold air motor shaft. Install and tighten the coupling nut. Torque to 75-80 ft-lb (138-146 N•m).

22. **If Replacing Overflow Chamber:** Insert the o-ring (102) into the lid (101). Tighten the new bottle (103) with lid (101) attached, to the fitting (104).

23. Turn connecting rod (14) to align holes in top cap (8) with holes on bellows chamber (1). Reattach the top cap (8) and shield mount spacer (9). Torque screws (10) to 100-120 in-lb (11-14 N•m).

NOTE: The overflow chamber fits best if the D flat is aligned to the front of the pump.

Inlet or Outlet Fitting Repair

Remove and replace the inlet or outlet fitting only if damaged. Replace one or both o-rings if a leak or seepage is present and every time a fitting is removed. To reassemble, grease the o-ring and apply high-strength thread locker to the fitting. Torque to 54-66 ft-lb (73-89 N•m).

Parts

Models with V-Packings

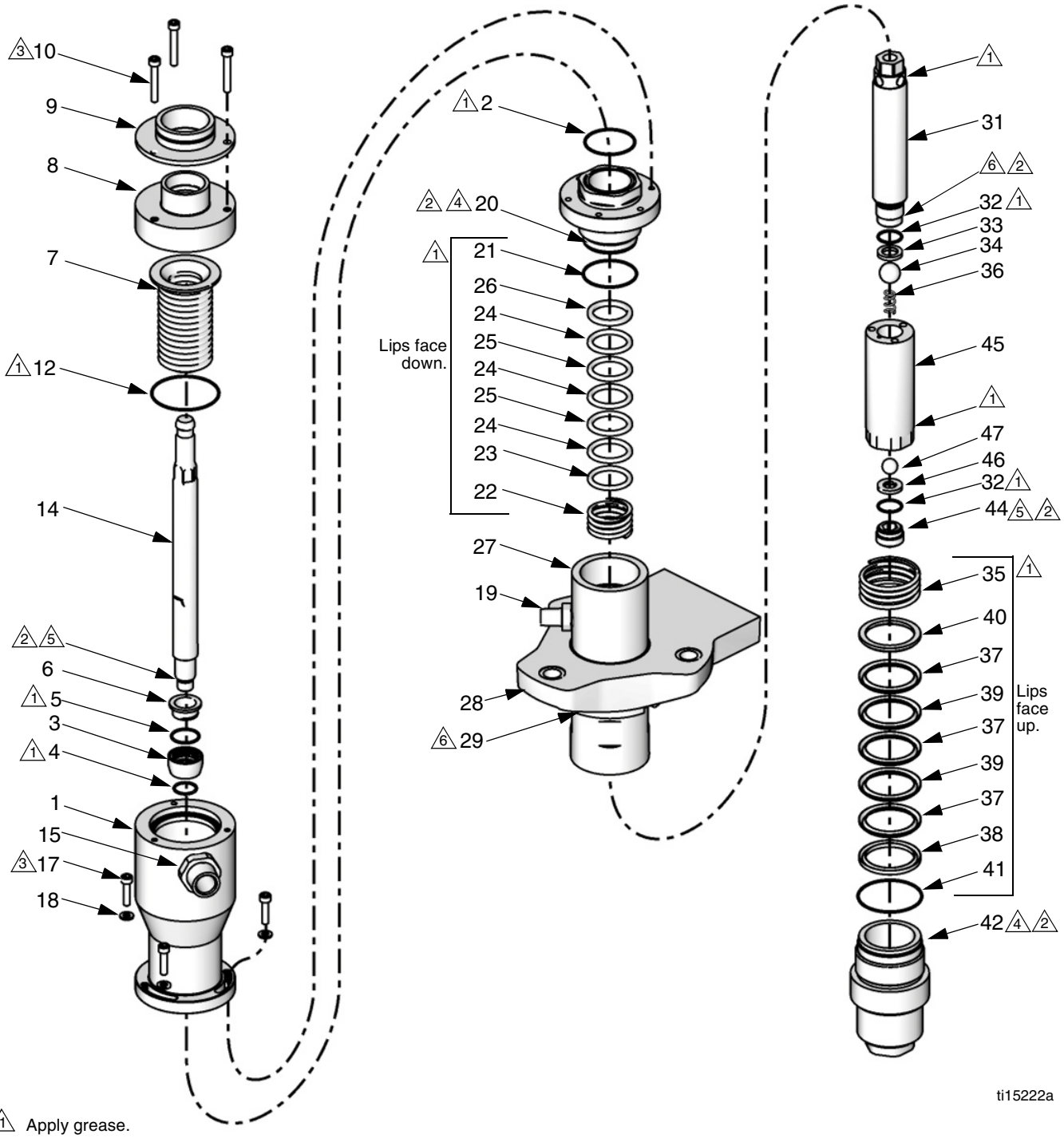

1 Apply grease.

2 Apply thread lubricant.

3 Torque to 100-120 in-lb (11-14 N•m).

4 Torque to 54-66 ft-lb (73-89 N•m).

5 Torque to 74-86 ft-lb (100-117 N•m).

6 Torque to 91-109 ft-lb (123-148 N•m).

Models with V-Packings

NOTE: Many parts are available in one or more Service/Repair kits. See page 20.

Ref	Description	Part	Qty
1	BELLOWS CHAMBER KIT (includes 2, 12, 15, 17, 18, 21, 32, and 41)		1
	LBO50A	24E758	
	LB100A and LB150A	24E759	
2	O-RING, packing nut, top	113082	1
3	BUSHING, snap	-----	1
4	O-RING, snap bushing	110135	1
5	O-RING, snap bushing	C20182	1
6	BUSHING, bellows	-----	1
7	BELLOWS KIT (includes 2, 4, 5, 12, 21, 32, and 41)		1
	LB050A	24A267	
	LB100A and LB150A	24E764	
8	TOP CAP KIT (includes 9, 10, and 12)	24A271	1
9	SPACER, shield mount	-----	1
10	SCREW, M6 x 40; *see Hardware Kit, page 20*	117030	3
12	O-RING, bellows chamber	116377	1
14	CONNECTING ROD KIT (includes 4, 5, 12, 32, and 41)	24E762	1
15	INLET FITTING KIT		1
	LB050A and LB100A, 3/4-14 npt x 1 3/16-16 un	24A842	
	LB150A 1-11.5 npt x 1 3/16-16 un	24E711	
17	SCREW, bellows chamber, M6 x 25, *see Hardware Kit, page 20*	117029	3
18	WASHER, bellows chamber; *see Hardware Kit, page 20*	117018	3
19	OUTLET FITTING KIT (includes 48)		1
	LB050A and LB100A, 3/8-18 npt x 3/4-16 un	24A840	
	LB150A, 3/4-14 npt x 1 3/16-16 un	24A842	
20	PACKING NUT KIT (includes 2, 12, 21, 32, and 41)		1
	LB050A	24F837	
	LB100A	24F223	
	LB150A	24F224	
21	O-RING, packing nut, bottom		1
	LB050A	107078	
	LB100A	104537	
	LB150A	110492	
22	SPRING	-----	1
23	GLAND, male	-----	1
24	V-PACKING, UHMWPE	-----	3
25	V-PACKING, PTFE	-----	2
26	GLAND, female	-----	1

Ref	Description	Part	Qty
27	CYLINDER KIT (includes 2, 12, 19, 21, 32, 41, and 48)		1
	LB050A	24A828	
	LB100A	24A829	
	LB150A	24A830	
28	ADAPTER, pump	-----	1
29	JAM NUT		1
	LB050A	24A635	
	LB100A	24A637	
	LB150A	24A639	
31	DISPLACEMENT ROD KIT (includes 2, 12, 21, 32, and 41)		1
	LB050A	24F492	
	LB100A	24F296	
	LB150A	24F295	
32	O-RING, piston	-----	2
33	SEAT, tungsten carbide	-----	1
34	CHECK BALL, stainless steel		1
	LB050A	101947	
	LB100A and LB150A	107203	
35	SPRING	-----	1
36	SPRING, ball stop	-----	1
37	V-PACKING, UHMWPE	-----	3
38	GLAND, female	-----	1
39	V-PACKING, PTFE	-----	2
40	GLAND, male	-----	1
41	O-RING, foot cap	-----	1
42	FOOT CAP KIT (includes 41)		1
	LB050A	24A831	
	LB100A	24A832	
	LB150A	24A833	
44	FLOW-THROUGH NUT	-----	1
45	PISTON KIT (includes 2, 12, 21, 32, and 41)		1
	LB050A	24F488	
	LB100A	24F489	
	LB150A	24F490	
46	SEAT, tungsten carbide	-----	1
47	CHECK BALL, stainless steel		1
	LB050A	101947	
	LB100A and LB150A	101859	
48	O-RING, outlet fitting, not shown	-----	1
55	NUT, coupling	15T311	1
56	COLLARS, coupling; *see page 20 for pack of 10*	184128	2

NOTE: *Replacement Danger and Warning labels, tags, and cards are available at no cost.*

--- Parts not sold separately. See pages 20-21for available kits.

Models with U-Cup Packings

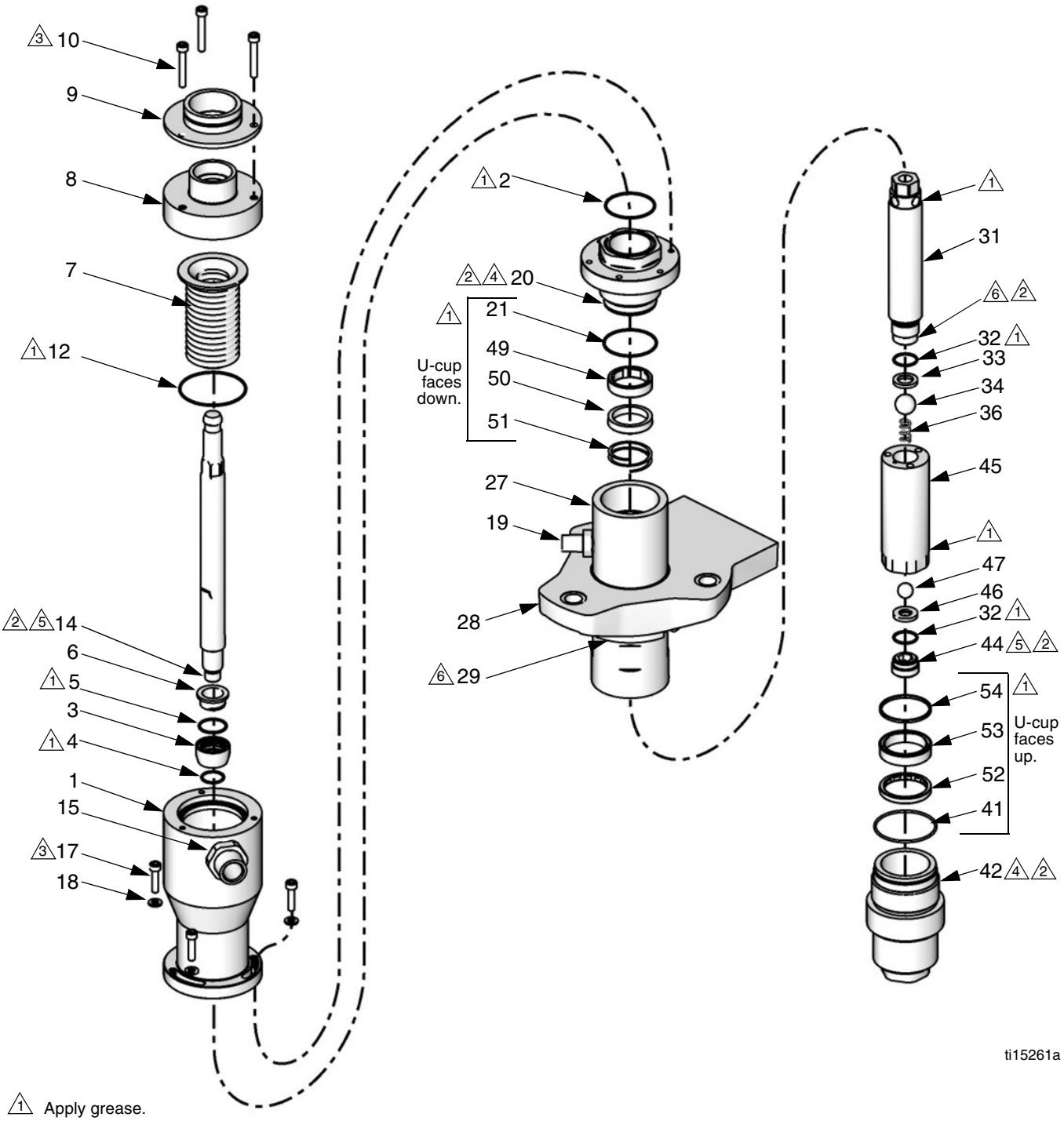

1 Apply grease.

2 Apply thread lubricant.

3 Torque to 100-120 in-lb (11-14 N•m).

4 Torque to 54-66 ft-lb (73-89 N•m).

5 Torque to 74-86 ft-lb (100-117 N•m).

6 Torque to 91-109 ft-lb (123-148 N•m).

Models with U-Cup Packings

NOTE: Many parts are available in one or more Service/Repair kits. See page 20.

Ref.	Description	Part Number	Qty
1	BELLOWS CHAMBER KIT (includes 2, 12, 15, 17, 18, 21, 32, and 41)		1
	LBO50B	24E758	
	LB100B and LB150B	24E759	
2	O-RING, packing nut, top	113082	1
3	BUSHING, snap	-----	1
4	O-RING, snap bushing	110135	1
5	O-RING, snap bushing	C20182	1
6	BUSHING, bellows	-----	1
7	BELLOWS KIT (includes 2, 4, 5, 12, 21, 32, and 41)		1
	LB050B	24A267	
	LB100B and LB150B	24E764	
8	TOP CAP KIT (includes 9, 10, and 12)	24A271	1
9	SPACER, shield mount	-----	1
10	SCREW, M6 x 40; *see Hardware Kit, page 20*	117030	3
12	O-RING, bellows chamber	116377	1
14	CONNECTING ROD KIT (includes 4, 5, 12, 32, and 41)	24E762	1
15	INLET FITTING KIT		1
	LB050B and LB100B, 3/4-14 npt x 1 3/16-16 un	24A842	
	LB150B, 1-11.5 npt x 1 3/16-16 un	24E711	
17	SCREW, bellows chamber, M6 x 25, *see Hardware Kit, page 20*	117029	3
18	WASHER, bellows chamber; *see Hardware Kit, page 20*	117018	3
19	OUTLET FITTING KIT (includes 48)		1
	LB050B and LB100B, 3/8-18 npt x 3/4-16 un	24A840	
	LB150B, 3/4-14 npt x 1 3/16-16 un	24A842	
20	PACKING NUT KIT (includes 2, 12, 21, 32, and 41)		1
	LB050B	24F837	
	LB100B	24F223	
	LB150B	24F224	
21	O-RING, packing nut, bottom		1
	LB050B	107078	
	LB100B	104537	
	LB150B	110492	
27	CYLINDER KIT (includes 2, 12, 19, 21, 32, 41, and 48)		1
	LB050B	24A828	
	LB100B	24A829	
	LB150B	24A830	
28	ADAPTER, pump	-----	1
29	JAM NUT		1
	LB050B	24A635	
	LB100B	24A637	
	LB150B	24A639	
31	DISPLACEMENT ROD KIT (includes 2, 12, 21, 32, and 41)		1
	LB050B	24F492	
	LB100B	24F296	
	LB150B	24F295	
32	O-RING, piston	-----	2
33	SEAT, tungsten carbide	-----	1
34	CHECK BALL, stainless steel	107203	1
36	SPRING, ball stop	-----	1
41	O-RING, foot cap	106259	1
42	FOOT CAP KIT (includes 41)		1
	LB050B	24A831	
	LB100B	24A832	
	LB150B	24A833	
44	FLOW-THROUGH NUT	-----	1
45	PISTON KIT (includes 2, 12, 21, 32, and 41)		1
	LB050B	24F488	
	LB100B	24F489	
	LB150B	24F490	
46	SEAT, tungsten carbide	-----	1
47	CHECK BALL, stainless steel	101859	1
48	O-RING, outlet fitting, not shown	-----	1
49	BEARING, throat	-----	1
50	U-CUP Packing, throat	-----	1
51	SPRING CLIP, throat	-----	1
52	BEARING, piston	-----	1
53	U-CUP Packing, piston	-----	1
54	WASHER, piston	-----	1
55	NUT, coupling	15T311	1
56	COLLARS, coupling; *see page 20 for pack of 10*	184128	2

NOTE: *Replacement Danger and Warning labels, tags, and cards are available at no cost.*

--- Parts not sold separately. See pages 20-21 for available kits.

Repair Kits

Kit Description	LB050A LB050B	LB100A LB100B	LB150A LB150B
O-Ring Kit - Includes o-rings (2, 4, 5, 12, 16, 21, 32, 41, and 48)	24E713	24E714	24E715
V-Packing Seal Kit Includes: springs (22, 35), glands (23, 26, 38, 40), v-packings (24, 25, 37, 39), and o-rings (2, 12, 21, 32, and 41)	24A655	24A656	24A657
U-Cup Seal Kit Includes: throat u-cup (50), bearing (49), and spring clip (51); piston u-cup (53), bearing (52), and washer (54). Also includes o-rings (2, 12, 21, 32, and 41)	24E716	24E631	24E632
Bushing Kit Includes: bellows bushing (6), snap bushing (3), and o-rings (2, 4, 5, 12, 16, 21, 32, and 41)	24A268	24E766	24E766
440 Stainless Steel Check Ball Kit Includes: Check balls (34, 47), ball stop spring (36), and o-rings (2, 12, 21, 32, and 41).	24A661	24A662	24A662
Tungsten Carbide Seats and 440 Stainless Steel Balls Repair Kit Includes seats (33, 46), check balls (34, 47), flow-through nut (44), and o-rings (2, 12, 21, 32, and 41)	24A787	24A788	24A788
Displacement Rod/Connecting Rod/Piston Kit Includes: displacement rod (31), piston (45), nylon extrusions (not in parts list), connecting rod (14), bellows (7), snap bushing (3), bellows bushing (6), seats (33, 46), check balls (34, 47), spring (36); flow-through nut (44); coupling nut (55), coupling collars (56), and o-rings (2, 4, 5, 12, 21, 32, and 41)	24A649	24A650	24A651
Piston Kits Includes: piston (45), nylon extrusions (not in parts list), and o-rings (2, 12, 21, 32, and 41)	24F488	24F489	24F490
Hardware Kit Includes: three top cap screws (10); three bellows chamber screws (17) and three washers (18)	24E712	24E712	24E712
Coupling Collars Kit - Includes: 10-pack of coupling collars	24A619	24A619	24A619

Optional Kits

Kit Description	LB050A LB050B	LB100A LB100B	LB150A LB150B
Reinforced PTFE V-Packing Kit* Reinforced PTFE throat packings and glands, reinforced PTFE piston packings and glands, o-rings, and springs	24J858	24J859	24J860
PTFE Bellows Kit* Includes PTFE bellows and o-rings	24J850	24J851	24J851
316 Stainless Steel Check Ball Kit** Includes: Check balls (34, 47), ball stop spring (36), and o-rings (2, 12, 21, 32 and 41).	24T257	24T258	24T258
316 Stainless Steel Seat and Ball Kit** Includes: Seats (33, 46), check balls (34, 47), flow-through nut (44) and o-rings (2, 12, 21, 32, and 41).	24A800	24A801	24A801

* *Use with materials that cause chemical compatibility concerns with UHMWPE, such as acid catalyst materials.*

** *Replaces standard kits for high corrosive applications.*

Accessories

Overflow Chamber Kit 24E298

Ref.	Description	Qty.
101	LID	1
102	O-RING	1
103	BOTTLE	1
104	FITTING, 2 x 1/4-18 npt	1
105	NUT, retaining	1
106	D-SHAPED SEAL, bellows	1

Dimensions

Displacement Pump Dimensions

Displacement Pump	A (Height*) in. (mm)	B (Inlet Size) in. npt	C (Outlet Size) in. npt	Weight lbs (kg)
LB050A, LB050B	23.6 (599)	3/4 in.	3/8 in.	26 (11)
LB100A, LB100B	23.6 (599)	3/4 in.	3/8 in.	30 (13)
LB150A, LB150B	23.6 (599)	1 in.	3/4 in.	34 (15)

** Height measured at midstroke.*

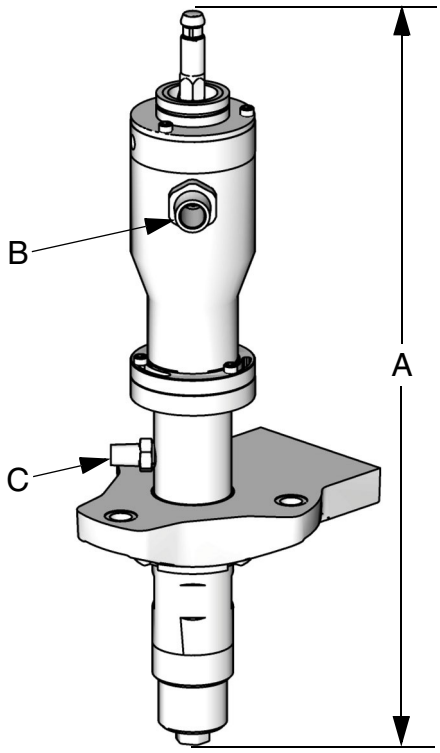

ti14532a

Technical Data

Maximum fluid working pressure	
LB050A and LB050B	4500 psi (33.1 MPa, 310 bar)
LB100A and LB100B	3600 psi (24.8 MPa, 248 bar)
LB150A and LB150B	2400 psi (16.5 MPa, 165 bar)
Maximum fluid inlet pressure	15 psi (0.1 MPa, 1.0 bar)
Maximum fluid temperature	160°F (71°C)
Ambient temperature range	35°–120°F (2°–49°C)
Stroke length	2.5 in.
Wetted parts	PEEK, PTFE, stainless steel, tungsten carbide, UHMWPE

Graco Standard Warranty

Graco warrants all equipment referenced in this document which is manufactured by Graco and bearing its name to be free from defects in material and workmanship on the date of sale to the original purchaser for use. With the exception of any special, extended, or limited warranty published by Graco, Graco will, for a period of twelve months from the date of sale, repair or replace any part of the equipment determined by Graco to be defective. This warranty applies only when the equipment is installed, operated and maintained in accordance with Graco's written recommendations.

This warranty does not cover, and Graco shall not be liable for general wear and tear, or any malfunction, damage or wear caused by faulty installation, misapplication, abrasion, corrosion, inadequate or improper maintenance, negligence, accident, tampering, or substitution of non-Graco component parts. Nor shall Graco be liable for malfunction, damage or wear caused by the incompatibility of Graco equipment with structures, accessories, equipment or materials not supplied by Graco, or the improper design, manufacture, installation, operation or maintenance of structures, accessories, equipment or materials not supplied by Graco.

This warranty is conditioned upon the prepaid return of the equipment claimed to be defective to an authorized Graco distributor for verification of the claimed defect. If the claimed defect is verified, Graco will repair or replace free of charge any defective parts. The equipment will be returned to the original purchaser transportation prepaid. If inspection of the equipment does not disclose any defect in material or workmanship, repairs will be made at a reasonable charge, which charges may include the costs of parts, labor, and transportation.

THIS WARRANTY IS EXCLUSIVE, AND IS IN LIEU OF ANY OTHER WARRANTIES, EXPRESS OR IMPLIED, INCLUDING BUT NOT LIMITED TO WARRANTY OF MERCHANTABILITY OR WARRANTY OF FITNESS FOR A PARTICULAR PURPOSE.

Graco's sole obligation and buyer's sole remedy for any breach of warranty shall be as set forth above. The buyer agrees that no other remedy (including, but not limited to, incidental or consequential damages for lost profits, lost sales, injury to person or property, or any other incidental or consequential loss) shall be available. Any action for breach of warranty must be brought within two (2) years of the date of sale.

GRACO MAKES NO WARRANTY, AND DISCLAIMS ALL IMPLIED WARRANTIES OF MERCHANTABILITY AND FITNESS FOR A PARTICULAR PURPOSE, IN CONNECTION WITH ACCESSORIES, EQUIPMENT, MATERIALS OR COMPONENTS SOLD BUT NOT MANUFACTURED BY GRACO. These items sold, but not manufactured by Graco (such as electric motors, switches, hose, etc.), are subject to the warranty, if any, of their manufacturer. Graco will provide purchaser with reasonable assistance in making any claim for breach of these warranties.

In no event will Graco be liable for indirect, incidental, special or consequential damages resulting from Graco supplying equipment hereunder, or the furnishing, performance, or use of any products or other goods sold hereto, whether due to a breach of contract, breach of warranty, the negligence of Graco, or otherwise.

FOR GRACO CANADA CUSTOMERS
The Parties acknowledge that they have required that the present document, as well as all documents, notices and legal proceedings entered into, given or instituted pursuant hereto or relating directly or indirectly hereto, be drawn up in English. Les parties reconnaissent avoir convenu que la rédaction du présente document sera en Anglais, ainsi que tous documents, avis et procédures judiciaires exécutés, donnés ou intentés, à la suite de ou en rapport, directement ou indirectement, avec les procédures concernées.

Graco Information

For the latest information about Graco products, visit www.graco.com.
For patent information, see www.graco.com/patents.

TO PLACE AN ORDER, contact your Graco distributor or call to identify the nearest distributor.
Phone: 612-623-6921 **or Toll Free:** 1-800-328-0211 **Fax:** 612-378-3505

All written and visual data contained in this document reflects the latest product information available at the time of publication. Graco reserves the right to make changes at any time without notice.

Original instructions. This manual contains English. MM 312793

Graco Headquarters: Minneapolis
International Offices: Belgium, China, Japan, Korea

GRACO INC. AND SUBSIDIARIES • P.O. BOX 1441 • MINNEAPOLIS MN 55440-1441 • USA

Copyright 2010, Graco Inc. All Graco manufacturing locations are registered to ISO 9001.
www.graco.com
Revision H- April 2014